Eytan Abramowitz

Professor Myers

MECE 3414 - Mechanics of Solids

# Overview

In this project I will perform a finite element analysis of a 3D printed part that will be used by the Columbia Airplane Club (CU AIAA). The club participates in an annual competition where we design a remote control plane that will be able to complete a set of preassigned tasks that change from year to year. The plane is designed to be modular, lightweight and easy to manufacture. The 'fuselage' of the plane is a carbon fiber square tube and other components are connected to the fuselage using 3D printed pieces that slot onto the fuselage. One of the most critical parts is the wing mount piece, the piece that connects the wings to the fuselage. This piece is designed to hold the wings in a dihedral position with an attack angle of approximately 5 degrees, and above the plane's center of gravity for stability. My goal in this analysis is to ensure that the part can withstand the different forces it may experience during flight as damage to this part would result in critical failure of the aircraft.

# Design Considerations

The design considerations for this part were that it needed to be as lightweight as possible, have tight tolerances for the wing slots, and be able to withstand the in-flight aerodynamic forces. 3D printing the part allowed for easy iterations to dial in the tolerances and made manufacturing the relatively complex structure significantly easier than if it had been machined. Additionally, we will be using set screws to help hold the pieces in places, so the tolerances do not need to be perfect as we are not completely relying on friction fitting.

# The Part

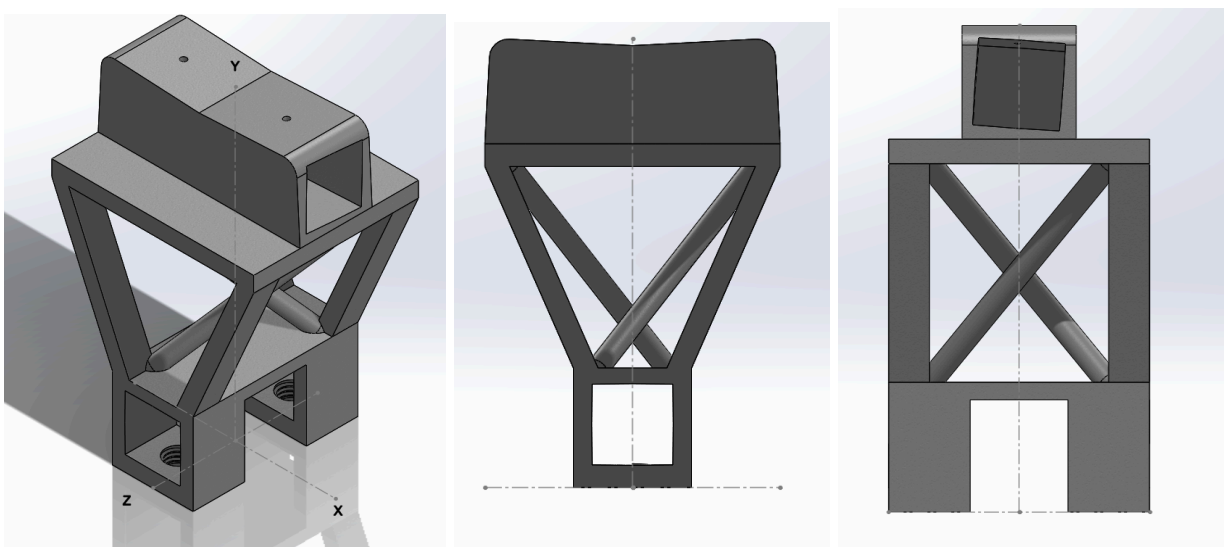


X = 10cm, Y=15cm , Z=8cm

## Boundary Conditions and Applied Forces

Even though it is unlikely that the plane will be in perfect static equilibrium during flight due to turbulence, for the analysis we will assume that it is in static equilibrium. Given this assumption, the main boundary conditions for the part is that it is being held down by the fuselage. In other words, the bottom of the slot for the fuselage will be fixed in place. Additionally, boundaries will be applied along the inside of the slots preventing inward movement, since the rods will be there, however sliding will be allowed. The analysis will also focus on the plane during level flight. It is important to note here that the highest aerodynamic forces the plane will experience will be during turns, not level flight, however that is beyond the scope of this analysis. Given this simplification, the part will experience forces in the wing support slot from the lifting and drag forces on the wing.

## Force calculations

To calculate the forces on the wing I will first analyze the 2D cross section of the wing since the wing is rectangular, then extend the forces along the length of the wing to calculate reaction forces in the slot. Using plots from airfoiltools.com, it is simple to determine the lift and drag coefficients at different Reynolds numbers and attack angles. Furthermore, it is assumed that the plane will remain in flow regimes with Reynolds numbers below 500,000, and the simulation will be ran at different velocities to test the part until failure.

| | |
|---|---|
| 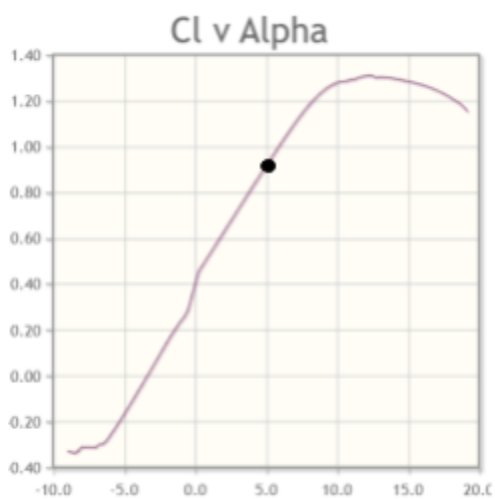  | 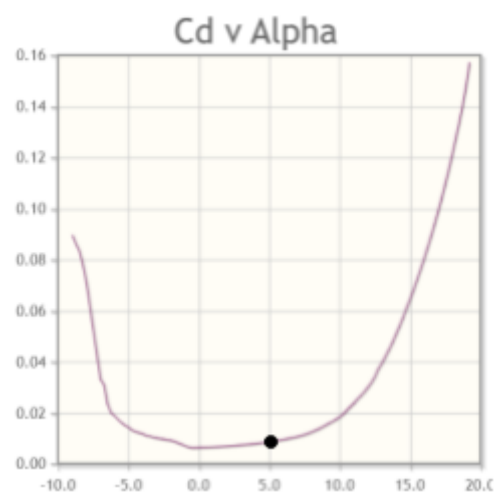  |
| Cl = ~.9<br>Chord length (c) = 35.56cm=0.3556m=14in<br>Air density[1] (ρ) = 1.225 kg/m^3<br>Wing length = 83.82cm = 33in | Cd = ~.01<br>Chord length (c) = 35.56cm=0.3556m=14in<br>Air density[1] (ρ) = 1.225 kg/m^3<br>Wing length = 83.82cm = 33in |

| | |
|---|---|
| Lift per unit length: $L' = \frac{1}{2}\rho V^2 c C_L$<br>$\text{Lift}_{20}$ = 78.41 N/m = .7841 N/cm<br>$\text{Lift}_{15}$ = 44.11 N/m = .4411 N/cm<br>$\text{Lift}_{10}$ = 19.60 N/m = .1960 N/cm | Drag per unit length: $D' = \frac{1}{2}\rho V^2 c C_D$<br>$\text{Drag}_{20}$ = 0.8712 N/m = .008712 N/cm<br>$\text{Drag}_{15}$ = 0.4901 N/m = .004901 N/cm<br>$\text{Drag}_{10}$ = 0.2178 N/m = .002178 N/cm |

It is unclear exactly how the reaction forces are in the slot holding the wing in place, so three possible solutions will be tested (see images). There will be two 'extremes' and an intermediate.

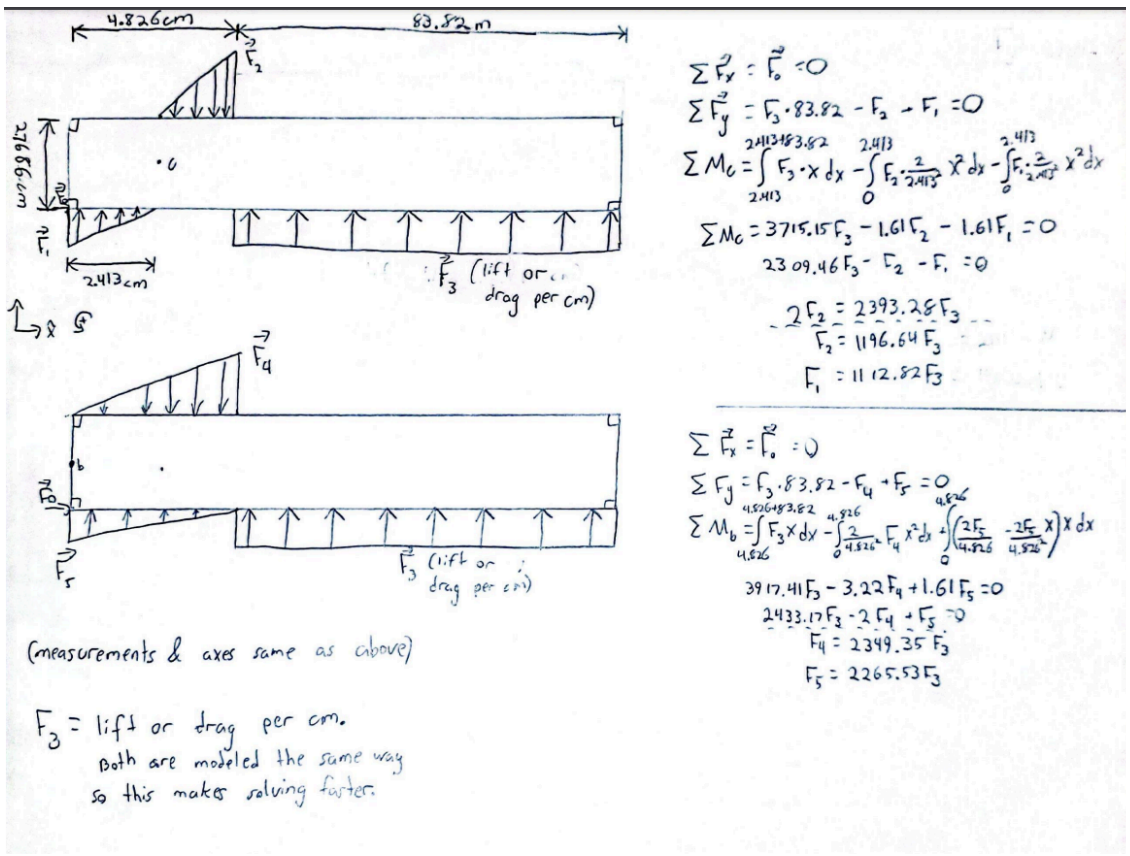


$$\sum \vec{F}_x = \vec{F}_0 = 0$$
$$\sum F_y = F_3 \cdot 83.82 - F_2 - F_1 = 0$$
$$\sum M_c = \int_{2.413}^{2.413+83.82} F_3 \cdot x\,dx - \int_0^{2.413} F_2 \cdot \frac{2}{2.413} x^2\,dx - \int_0^{2.413} F_1 \cdot \frac{2}{2.413} x^2\,dx$$
$$\sum M_c = 3715.15F_3 - 1.61F_2 - 1.61F_1 = 0$$
$$2309.46F_3 - F_2 - F_1 = 0$$
$$2F_2 = 2393.28F_3$$
$$F_2 = 1196.64F_3$$
$$F_1 = 1112.82F_3$$

$$\sum \vec{F}_x = \vec{F}_0 = 0$$
$$\sum F_y = F_3 \cdot 83.82 - F_4 + F_5 = 0$$
$$\sum M_b = \int_{4.826}^{4.826+83.82} F_3 x\,dx - \int_0^{4.826} \frac{2}{4.826} F_4 x^2\,dx + \int_0^{4.826} \left(\frac{2F_5}{4.826} - \frac{2F_5}{4.826^2} x\right) x\,dx$$
$$3917.41F_3 - 3.22F_4 + 1.61F_5 = 0$$
$$2433.17F_3 - 2F_4 + F_5 = 0$$
$$F_4 = 2349.35F_3$$
$$F_5 = 2265.53F_3$$

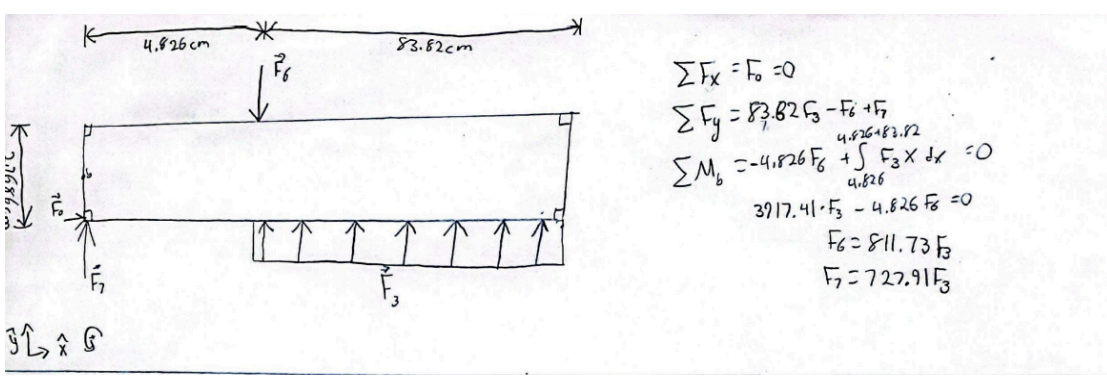


$$\sum F_x = F_0 = 0$$
$$\sum F_y = 83.82F_3 - F_6 + F_7$$
$$\sum M_b = -4.826F_6 + \int_{4.826}^{4.826+83.82} F_3 x\,dx = 0$$
$$3917.41 \cdot F_3 - 4.826F_6 = 0$$
$$F_6 = 811.73F_3$$
$$F_7 = 727.91F_3$$

*Moment equations are around points marked on the drawings. The equations can also be easily verified by collapsing the forces to their centroids.*

Force Results:

| **Case 1 (intermediate)** | $F_1 = (1112.82)*F_3 \rightarrow Drag_1/Lift_1$<br>$F_2 = (1196.64)*F_3 \rightarrow Drag_2/Lift_2$ | |
|---|---|---|
| 20m/s :<br>$F_{3Lift}$ = .7841 N/cm<br>$F_{3Drag}$= .008712 N/cm | 15m/s :<br>$F_{3Lift}$ = .4411 N/cm<br>$F_{3Drag}$= .004901 N/cm | 10m/s :<br>$F_{3Lift}$ = .1960 N/cm<br>$F_{3Drag}$= .002178 N/cm |
| **$Drag_1$ = 10.43 N**<br>**$Drag_2$ = 9.69 N**<br>**$Lift_1$ = 938.29 N**<br>**$Lift_2$ = 872.56 N** | **$Drag_1$ = 5.86**<br>**$Drag_2$ = 5.45**<br>**$Lift_1$ = 527.78**<br>**$Lift_2$ = 490.81** | **$Drag_1$ = 2.61**<br>**$Drag_2$ = 2.42**<br>**$Lift_1$ = 234.57**<br>**$Lift_2$ = 218.14** |

| **Case 2 (extreme, wide)** | $F_4 = (2349.35)*F_3 \rightarrow Drag_1/Lift_1$<br>$F_5 = (2265.53)*F_3 \rightarrow Drag_2/Lift_2$ | |
|---|---|---|
| 20m/s :<br>$F_{3Lift}$ = .7841 N/cm<br>$F_{3Drag}$= .008712 N/cm | 15m/s :<br>$F_{3Lift}$ = .4411 N/cm<br>$F_{3Drag}$= .004901 N/cm | 10m/s :<br>$F_{3Lift}$ = .1960 N/cm<br>$F_{3Drag}$= .002178 N/cm |
| **$Drag_1$ = 20.47 N**<br>**$Drag_2$ = 19.74 N**<br>**$Lift_1$ = 1842.12 N**<br>**$Lift_2$ = 1776.40 N** | **$Drag_1$ = 11.51**<br>**$Drag_2$ = 11.10**<br>**$Lift_1$ = 1036.19**<br>**$Lift_2$ = 999.22** | **$Drag_1$ = 5.12**<br>**$Drag_2$ = 4.93**<br>**$Lift_1$ = 460.53**<br>**$Lift_2$ = 444.10** |

| **Case 3 (extreme, point)** | $F_6 = (811.73)*F_3 \rightarrow Drag_1/Lift_1$<br>$F_7 = (727.91)*F_3 \rightarrow Drag_2/Lift_2$ | |
|---|---|---|
| 20m/s :<br>$F_{3Lift}$ = .7841 N/cm<br>$F_{3Drag}$= .008712 N/cm | 15m/s :<br>$F_{3Lift}$ = .4411 N/cm<br>$F_{3Drag}$= .004901 N/cm | 10m/s :<br>$F_{3Lift}$ = .1960 N/cm<br>$F_{3Drag}$= .002178 N/cm |
| **$Drag_1$ = 7.07 N**<br>**$Drag_2$ = 6.34 N**<br>**$Lift_1$ = 636.47 N**<br>**$Lift_2$ = 570.75 N** | **$Drag_1$ = 3.98**<br>**$Drag_2$ = 3.57**<br>**$Lift_1$ = 358.02**<br>**$Lift_2$ = 321.05** | **$Drag_1$ = 1.77**<br>**$Drag_2$ = 1.59**<br>**$Lift_1$ = 159.12**<br>**$Lift_2$ = 142.69** |

*In the columns labeled with velocities, the subscript 1 indicates the larger component of the reaction force, which is acting further from the fuselage.*

## Simulation Overview

The part will be analyzed in two main configurations, without diagonal support beams, and with the support beams. Without the support beams, the model is symmetrical along the length of the fuselage, however the beams cross over the fuselage at different points. While the symmetry allows for the simulation to be simplified for the beamless configuration, all

simulations will be run on the entire piece for consistency. The initial simulations will also be run using polylactic acid (PLA) as the material for the part, since PLA is a common thermoplastic used in 3D printing, especially in the Columbia Makerspace. Given that the material of choice is PLA, which is considered a brittle material[2], the analysis will be looking at the first principal stress. Furthermore, as indicated by the force calculations above, the simulation will be run assuming different velocities to understand when and where the part may fail. The simulations will be run on the configuration with the support beams, then at the critical or near the critical velocities the simulation will be run on the beamless configuration to understand the benefit they provide, if at all.

## Material Properties [3,4]

| | |
|---|---|
| Young's Modulus | 3.5 GPa |
| Poisson's Ratio | .35 |
| Shear Modulus | 2.4 GPa |
| Mass Density | 1.3 g/cm^3 |
| Tensile Strength | 50 MPa |
| Yield Strength | *~Tensile strength since PLA is brittle* |

*Assuming linear isotropic material. <u>3D printed materials are NOT linear isotropic materials.</u>*

## Mesh Convergence Study

Before running the simulations, a mesh convergence study is necessary to ensure there are no singularities. The different studies show that the highest stress is where we would expect it to be, and that there is not a singularity. While these plots do not demonstrate strict convergence, we can see the max stress is not exploding, and is where we would expect it to be. The model also did not need further simplification or fillets in this area since there were fillets already in the design to match the shape of the rods.

| Fine: 6.420*10^7 | Medium: 6.718*10^7 | Coarse: 6.336*10^7 |
|---|---|---|
| 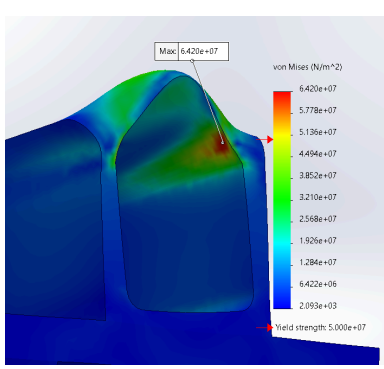 | 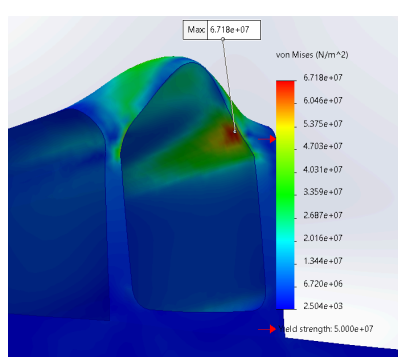 | 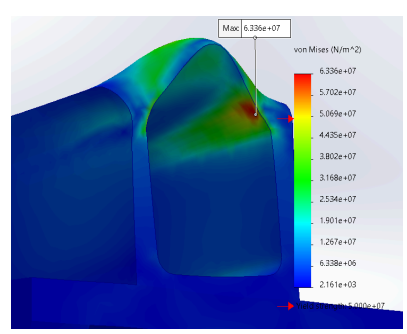 |

# Results

Red indicates a max above the ultimate yield strength (i.e. brittle failure). Green indicates a max below the ultimate yield strength.

Case 1 (intermediate)

| | 20m/s | 15m/s | 10m/s |
|---|---|---|---|
| Max First Principal Stress | 7.866*10^7 | 4.425*10^7 | 1.967*10^7 |

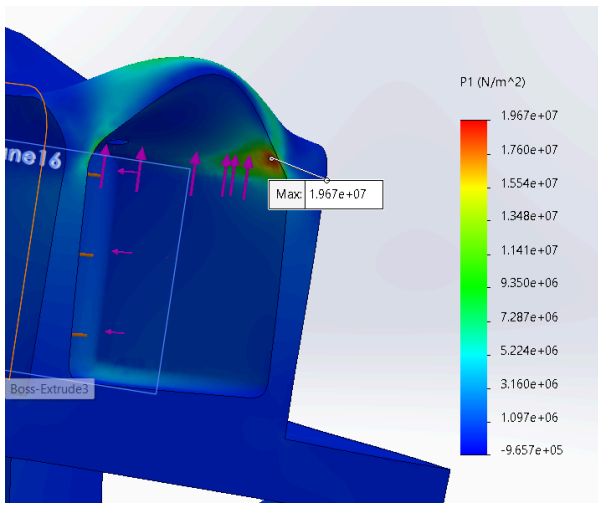


10m/s

Case 2 (extreme, wide)

| | 20m/s | 15m/s | 10m/s |
|---|---|---|---|
| Max First Principal Stress | 8.889*10^7 | 5.024*10^7 | 2.233*10^7 |

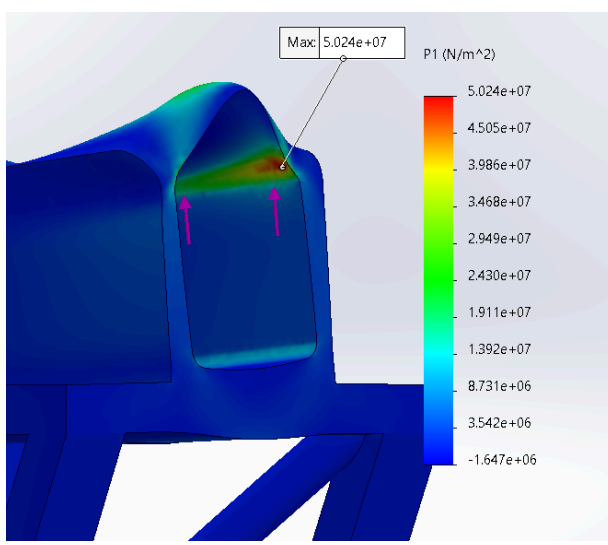


15 m/s

Case 3 (extreme, point)

| | 20m/s | 15m/s | 10m/s |
|---|---|---|---|
| Max First Principal Stress | 2.288*10^8 | 1.287*10^8 | 5.720*10^7 |

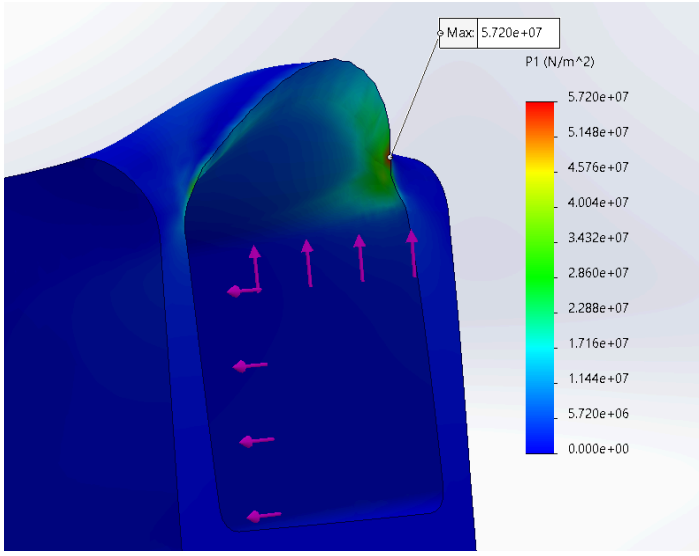


10m/s

Beamless Configuration - Wide 15m/s. Max: 3.422*10^7

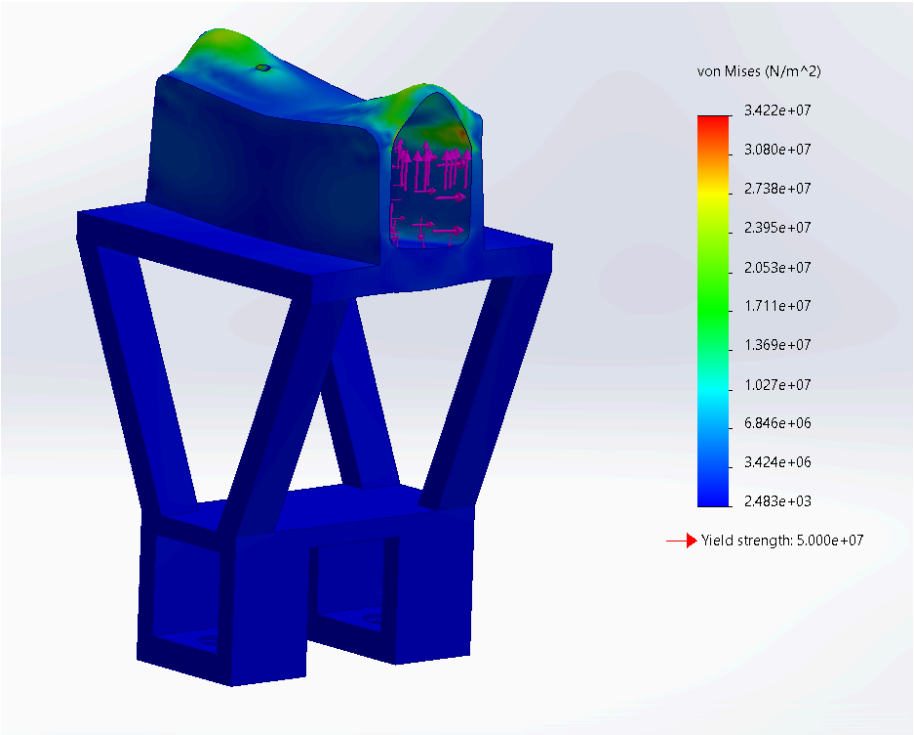

# Limitations

While the analysis gives useful insight into where and how the internal forces express themselves in the piece, many engineering assumptions were made along the way. Some of the most critical assumptions made in this analysis are assuming the piece is made of a linear isotropic material, the plane is only in level flight and that the wings are producing the theoretical maximum lift. Of these assumptions, the first has the largest potential for causing critical failure as this assumption is likely leading to a model that simulates a material stronger than it truly is. Along the print lines it is likely that the PLA plastic is weaker than the ultimate yield strength describes. This could be remedied using a lower ultimate yield strength that matches the yield strength in the weakest direction. The assumption regarding lift and drag both are assuming more lift and drag force than there will be, so this assumption is building in extra safety. The third major assumption is more of a simplification than an assumption. The simulation still provides an accurate visualization of level flight, but to ensure the part doesn't fail during flight, force calculations would need to be done to understand how the G-forces would affect the part and plane as a whole.

# Further Testing & Conclusion

Due to how close many of the results are to the ultimate yield strength, it is critically important to verify these results and calculations to prevent failure during flight. Before completely redesigning the piece and making it unnecessarily bulky, I would like to perform failure tests on a prototype part. This would involve clamping the part to a stable object, inserting the wing rods, and pulling upward on the wing rods using a force gauge. If the results of the physical test match the simulations then a couple of options are available. The first is simply changing the material, which is a relatively simple process since the part is being 3D printed. Additionally, the piece can be modified to be bulkier around the points of high stress. Once the level flight simulations are verifiably accurate and the simulations show the part won't fail, the next step is analyzing the part during turns. Given the current simulation results the part should not be placed on the plane and flown with.

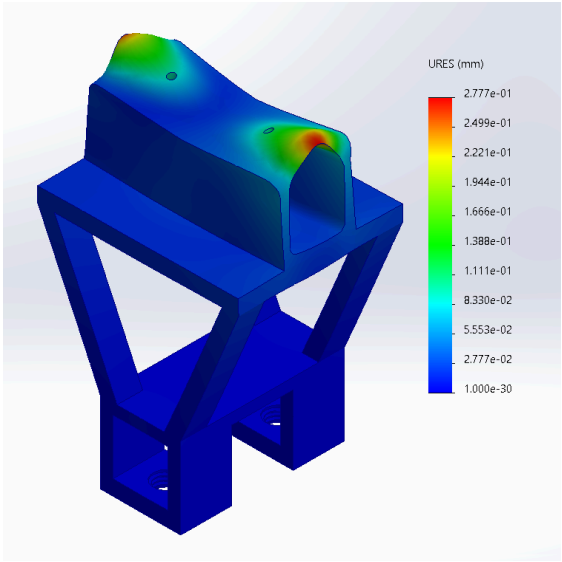

# Source


1. https://macinstruments.com/blog/what-is-the-density-of-air-at-stp/#:~:text=According%20to%20the%20International%20Standard,%3A%200.0765%20lb%2Fft%5E3
2. https://onlinelibrary.wiley.com/doi/abs/10.1002/macp.201900475#:~:text=Polylactic%20acid%20(PLA)%20is%20an,loss%20in%20strength%20is%20challenging.
3. https://www.makeitfrom.com/material-properties/Polylactic-Acid-PLA-Polylactide
4. https://iopscience.iop.org/article/10.1088/1742-6596/2468/1/012094/pdf#:~:text=Poisson's%20ratio%20of%20PLA%20material%20is%20considered%20to%20be%200.35.